SSI SCHAEFER

R3000 Automotive

USA HEADQUARTERS
Schaefer Systems International, Inc.

Shipping Address
10021 Westlake Drive
Charlotte, NC 28273

Mailing Address
P.O. Box 7009
Charlotte, NC 28241

Tel: 704-944-4500
Fax: 704-588-1862

PACKAGING SYSTEMS DIVISION
USA, CANADA, MEXICO

961 Beasley Street
Suite 120
Lexington, KY 40509

Tel: 859-294-5615
Fax: 859-294-5616
Toll Free: 888-SSI-TOTE
Email: packaginghelp@ssitote.net

Customer Service
Tel: 704-944-4583
Fax: 704-944-4582

Email: general@ssimail.net
www.ssi-schaefer.us

Edition 1, 07-2009. ©2009 SSI SCHAEFER
We assume no responsibility for published errors.

Automotive

The automotive industry places more complex demands on storage than most other industries. Those requirements demand a system with flexibility, strength, efficiency and modularity. Schaefer's R3000 Shelving offers the widest range of automotive-specific storage solutions in the industry, such as:

- Catwalk capability, to three levels
- Containers compatibility sized to cube out each shelf level
- Bulk storage using basic units
- Glass and cable holders
- Exhaust storage
- Free-standing racks
- Doors
- Drawers
- Wire mesh panels
- Partitions and dividers
- Counter installations

Auto Parts Storage

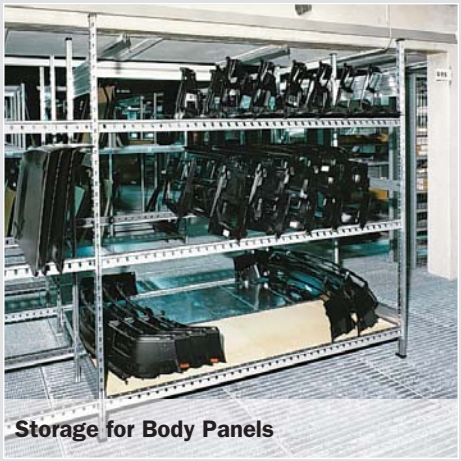

Storage for Body Panels

Glass and Flexible Cable Storage

Tire Storage

Bulk Storage for Large Components

Storage Frames For Body Parts

Because of their awkward shapes, the storage of bulky parts such as exhaust systems, bumpers and windshields presents a special challenge. Schaefer has designed racking that is so versatile it can be extended to most any desired length and will accommodate almost any type body part.

- Simple to assemble and install
- Shelf height adjustable in 2" increments
- Frames have lugs on both sides for expansion in any direction
- Individual or connected shelving bay can be formed
- Crossbeams have pre-punched holes spaced 2" apart for inserting self-locking rods to store exhaust pipes, axles, etc.

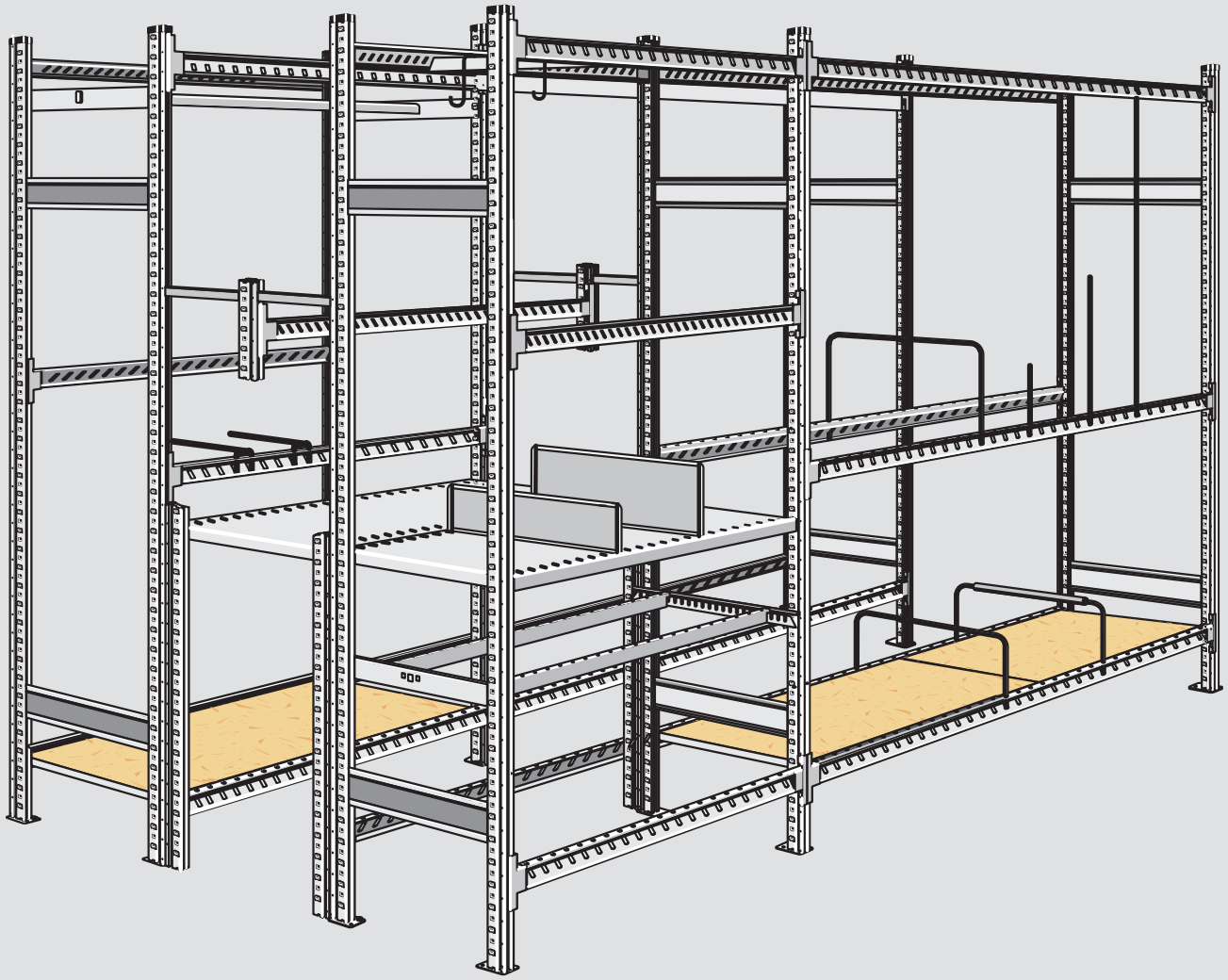

Bridge Beam

- Spans between both posts in a frame and holds a mini post
- Creates adjustable-depth tire or bulk storage bay

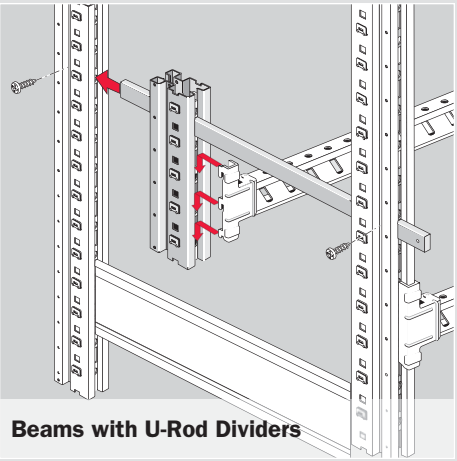

Beams with U-Rod Dividers

Bridge Beam Sets

Order #	Bay Depth
R3BBS.12	12"
R3BBS.16	16"
R3BBS.18	18"
R3BBS.20	20"
R3BBS.24	24"
R3BBS.32	32"

Accessories

Order#	Item	Description	Size
R3VDR.007	Vertical Divider	for Bulk Beams only	6.5" H
R3VDR.012	Vertical Divider	for Bulk Beams only	12" H
R3UDR.3214	U-Rod Divider	for Bulk Beams only	14" H x 32" D
R3UDC.32	U-Rod Covering	made of protective foam	30" L
US4100	Uniset Level	uniset level consists with 4 pieces	32" D x 39" W
UT4114	Uniset Beam	to add-on to US4100 set	39" L
R3HDR.16	Horizontal Divider	for Bulk Beams only	16" L
R3HDR.32	Horizontal Divider	for Bulk Beams only	32" L
CRSH	S-Hook	for hanging on "v" or GR supports	7"
CRSH90	S-Hook 90*	for hanging on "v" or GR supports	7"
CRTH	T-Hook 90*	for hanging on "v" or GR supports	7"

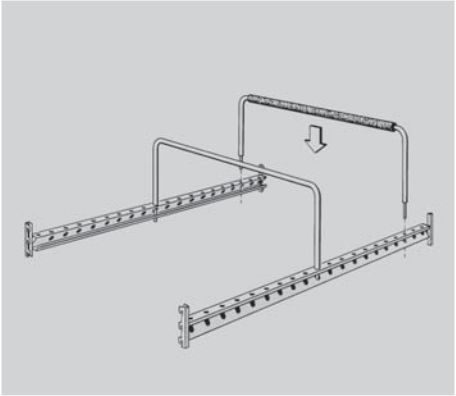

Beams with U-Rod Dividers

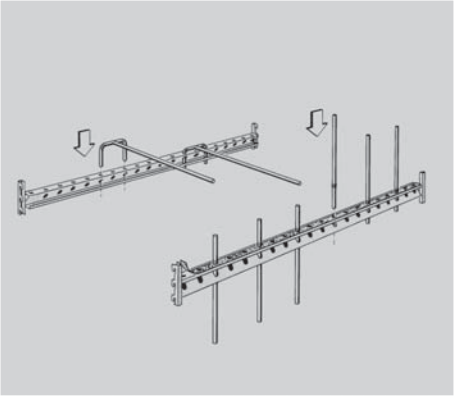

Beams with Vertical & Horizontal Rods

Uniset

Uniset

- Uniset allows additional bulk beams to be added at any point in between the posts
- Fore to aft beams are equipped with slots for inserting the Uniset beams

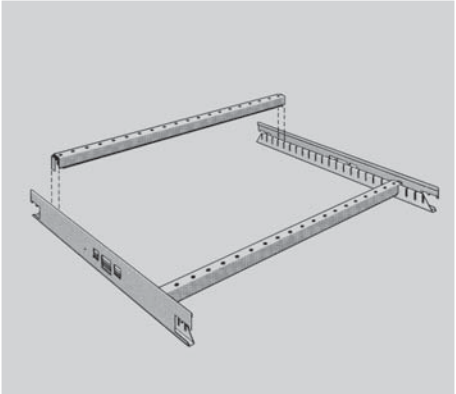

Uniset

"Z" Profile Beams

- Bulk beams can be installed singly, at any point on the frame
- Beams can be installed in all directions. A minimum of 4 beams per bay are required for structural integrity
- Hooks and deck supports, which are inserted in the bulk beams, are available for hanging parts storage

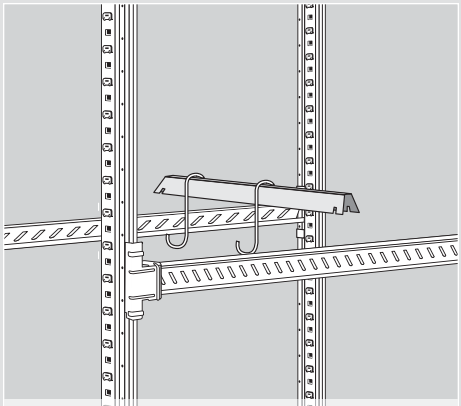

Wood Deck Beam for Hanging Storage

Wood Deck "V" Support

Order #	Bay Depth
WDS12 WDS16 WDS18	12" 16" 18"
WDS20 WDS24 WDS32	20" 24" 32"

Bulk & Tire Beams

Bulk Beam	Tire Beam	Width
R3ZBM.39 R3ZBM.48	R3TB.37 R3TB.38	39" 48"
R3ZBM.50 R3ZBM.79	R3TB.39 R3TB.40	50.5" 79.5"

Frames

- Galvanized steel posts with lugs on both sides
- Lugs are spaced 2" apart
- Frames shipped preassembled

Garment Rail / Hangable Parts

Order #	Dimensions	
	Depth	Width
R3GRS.1236	12"	36"
R3GRS.1836	18"	36"
R3GRS.2436	24"	36"
R3GRS.1239	12"	39"
R3GRS.1639	16"	39"
R3GRS.2039	20"	39"
R3GRS.2439	24"	39"
R3GRS.3239	32"	39"
R3GRS.1248	12"	48"
R3GRS.1848	18"	48"
R3GRS.2448	24"	48"
R3GRS.1250	12"	50"
R3GRS.1650	16"	50"
R3GRS.2050	20"	50"
R3GRS.2450	24"	50"
R3GRS.3250	32"	50"

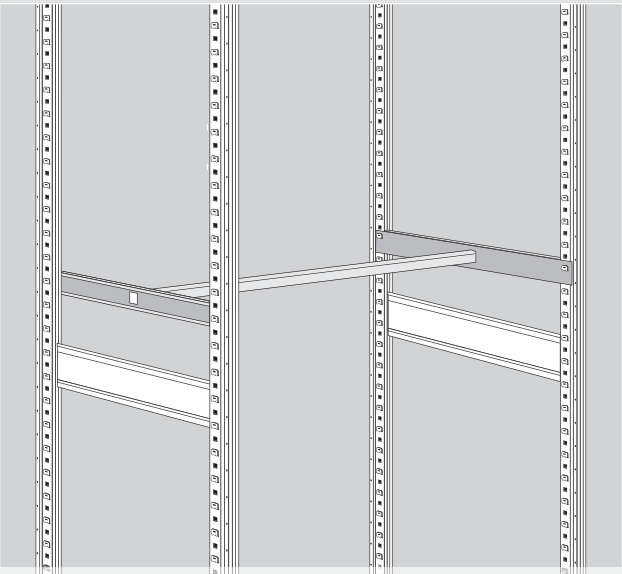

Garment Rail & Hanging Parts Set

Wood Deck Levels

Order #	Dimensions	
	Depth	Width
R3WDL.1239	12"	39"
R3WDL.1639	16"	39"
R3WDL.2039	20"	39"
R3WDL.2439	24"	39"
R3WDL.3239	32"	39"
R3WDL.1248	12"	48"
R3WDL.1848	18"	48"
R3WDL.2448	24"	48"
R3WDL.1250	12"	50"
R3WDL.1650	16"	50"
R3WDL.2050	20"	50"
R3WDL.2450	24"	50"
R3WDL.3250	32"	50"
R3WDL.1279	12"	79"
R3WDL.1679	16"	79"
R3WDL.2079	20"	79"
R3WDL.2479	24"	79"
R3WDL.3279	32"	79"

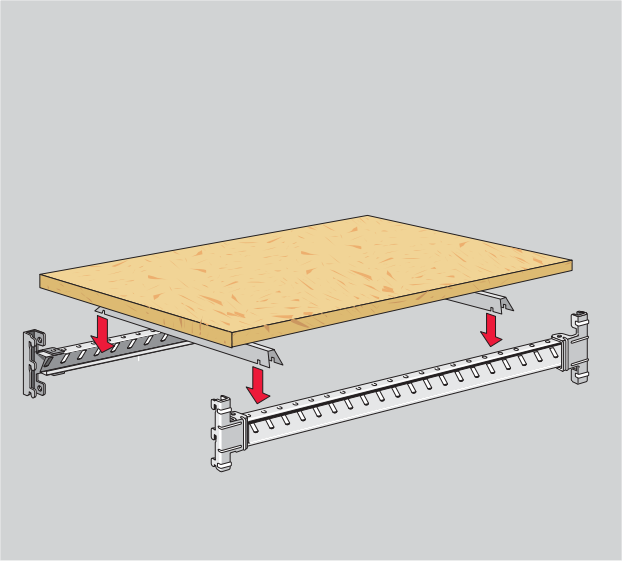

Wood Deck Level

Single-Sided Rack with Tube Arms

Free-Standing Racks

Single-sided or double-sided racks specifically designed for the storage of brake lines, air pipes, oil pressure pipes, chrome strips, body trim, starter cable, and more. Storage specifically designed to manage hard-to-handle, bulky parts.

- Single- and double-sided racks
- Ordered and shipped as a unit
- Can be used individually or connected in rows
- Versatile—add cantilever arms and storage trays as needed
- High load capacity:
  Single-sided, 250 lbs per shelf
  Double-sided, 500 lbs per shelf
- Gray enamel finish
- Must be bolted to the floor

Free-Standing Racks & Accessories

Item	Order #	Dimensions		
		Height	Depth	Width
Single Sided Uprights*	**CRUS.90**	90.5"	20"	—
Double Sided Uprights*	**CRUD.90**	90.5"	34"	—
Cross Brace (Order 2 min per Unit)	**CRCB.39**	—	39"	39"
Cantilever Arm (2 Per Level) 100lb.cap. per pair	**CRA.10**	—	10"	—
Cantilever Arm XHD (2 Per Level) 250lb.cap. per pair	**CRA.16**	—	16"	—
Storage Tray	**CRTR.1056**	6.5"	10"	56"
Storage Tray X-Duty	**CRTR.1655**	6.5"	16"	56"
Storage Tray X-Wide	**CRTR.1684**	6.5"	16"	83"
Tube Arm for Glass	**CRTA.23**	—	23.5"	—
Hanger Tube (Order 2 min. per Unit)	**CRTB.23**	62"	—	—
Mount Bracket for Hanger Tube	**CRB.22**	5"	22"	—

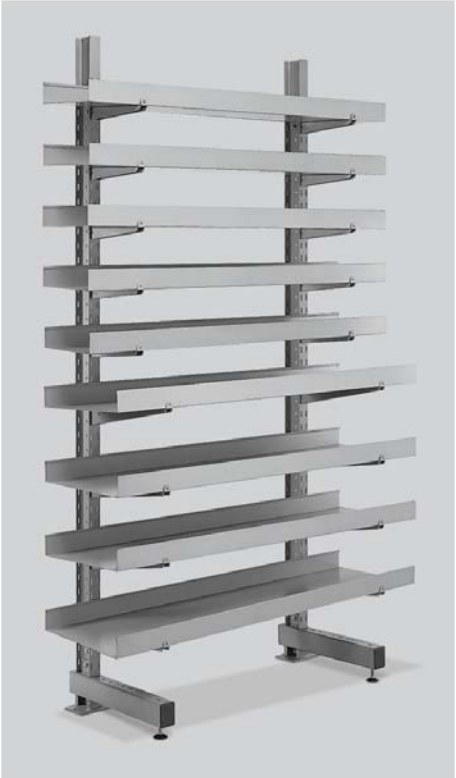

Double-Sided Rack with Cantilever Arms

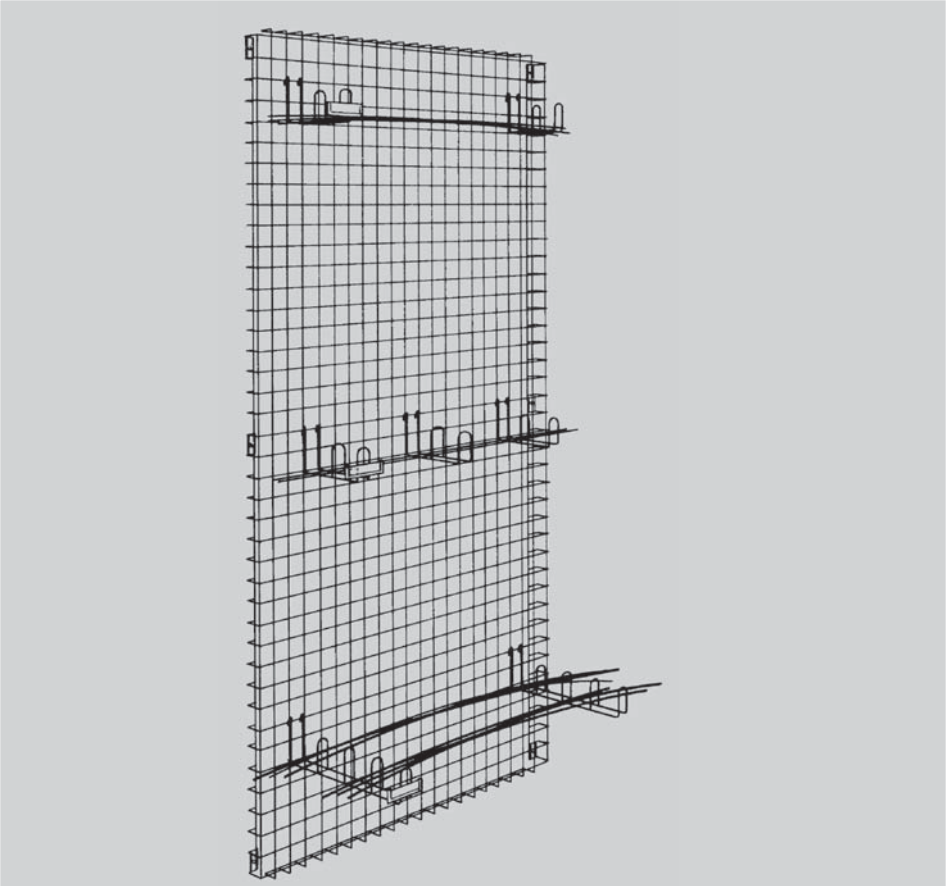

Wire Mesh Panels with One-Section, Two-Section & Four-Section Hooks

Wall-Mounted Storage

Wall-mounted panels with sectional hooks for cables, trim parts and other large, lightweight items.

- Wall-mounted panels provide good visibility and accessibility to parts
- Maximize the use of space for hard-to-store parts
- Wire mesh panels hold lightweight parts such as trim strips, molding, belts, etc.
- Wall panels are painted steel
- Hooks are chrome or galvanized

Wire Mesh Wall Panel

Item	Order #	Dimensions	
		Height	Width
Wire Mesh Panel	**WMP.4281**	81"	41.5"
One-Section Hook	**WMPH.1**	3"	1.75"
Two-Section Hook	**WMPH.2**	3"	1.75"
Four Section Hook	**WMPH.4**	3"	1.75"
Label Holder	**WPMLH**	1"	3.5"
Label Cards (100 Qty)	**WMPLS**	—	—
Label Covers (100 Qty)	**WMPLP**	—	—